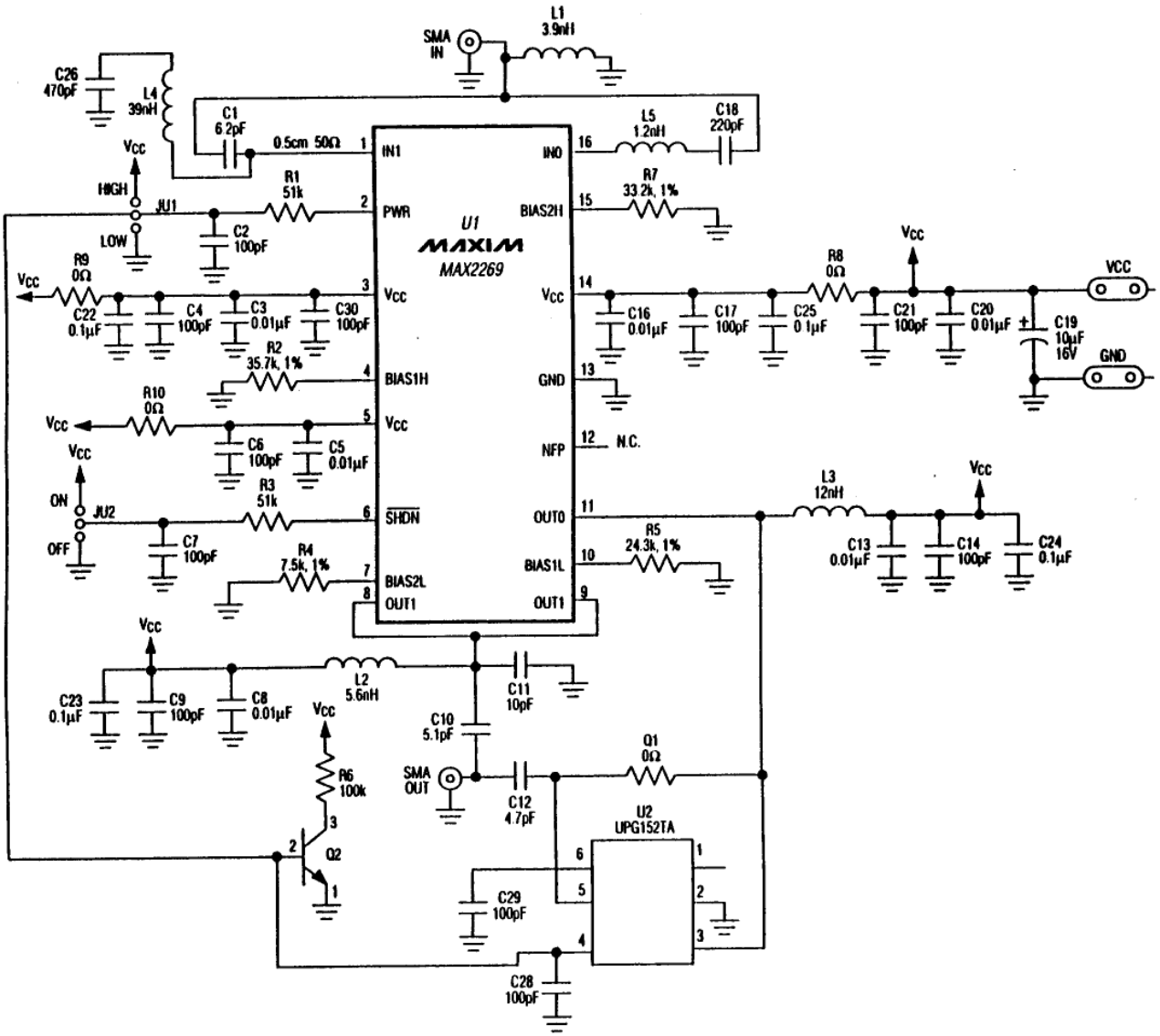
SMA IN
L1 3.9nH
C26 470pF
L4 39nH
C1 6.2pF
0.5cm 50Ω
L5 1.2nH
C18 220pF
Vcc
HIGH
JU1
LOW
R1 51k
C2 100pF
R7 33.2k, 1%
U1
MAXIM
MAX2269
IN1
PWR
Vcc
BIAS1H
Vcc
SHDN
BIAS2L
OUT1
IN0
BIAS2H
Vcc
GND
NFP
N.C.
OUT0
BIAS1L
OUT1
R9 0Ω
C22 0.1µF
C4 100pF
C3 0.01µF
C30 100pF
R2 35.7k, 1%
R8 0Ω
C16 0.01µF
C17 100pF
C25 0.1µF
C21 100pF
C20 0.01µF
C19 10µF 16V
VCC
GND
R10 0Ω
C6 100pF
C5 0.01µF
ON
JU2
OFF
R3 51k
C7 100pF
R4 7.5k, 1%
R5 24.3k, 1%
L3 12nH
C13 0.01µF
C14 100pF
C24 0.1µF
C23 0.1µF
C9 100pF
C8 0.01µF
L2 5.6nH
C11 10pF
C10 5.1pF
SMA OUT
C12 4.7pF
Q1 0Ω
R6 100k
Q2
U2
UPG152TA
C29 100pF
C28 100pF

Rev. 1.0.